Apendix D

Fire Apparatus Access Roads

TABLE D103.4
REQUIREMENTS FOR DEAD-END FIRE APPARATUS ACCESS ROADS

LENGTH (feet)	WIDTH (feet)	TURNAROUNDS REQUIRED
0–150	20	None required
151–500	20	120-foot Hammerhead, 60-foot "Y" or 96-foot-diameter cul-de-sac in accordance with Figure D103.1
501–750	26	120-foot Hammerhead, 60-foot "Y" or 96-foot-diameter cul-de-sac in accordance with Figure D103.1
Over 750	Special approval required	

For SI: 1 foot = 304.8 mm.

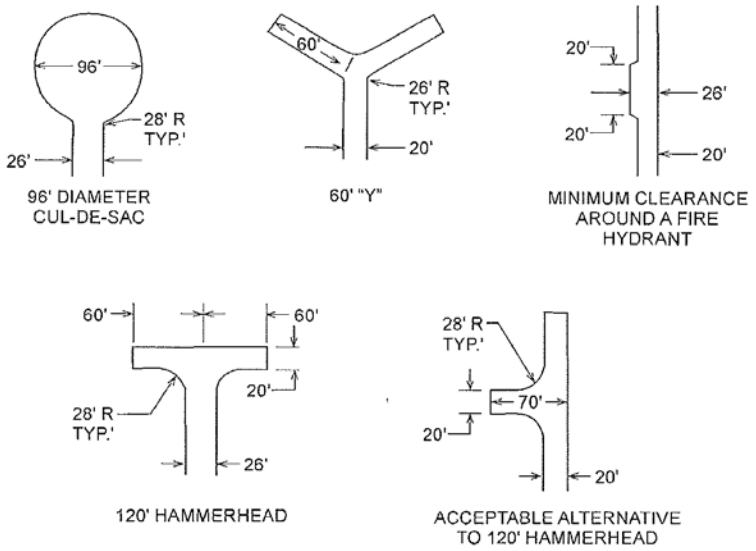

For SI: 1 foot = 304.8 mm.

FIGURE D103.1
DEAD-END FIRE APPARATUS ACCESS ROAD TURNAROUND