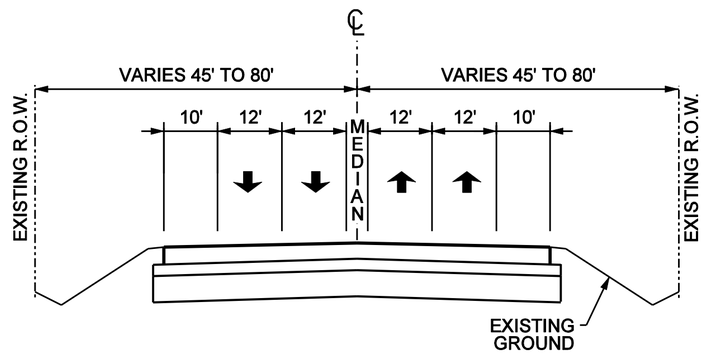

EXISTING F.M.423

4 LANE SECTION
FROM STEWARTS CREEK RD TO SOUTH OF STEWART CREEK BRIDGE

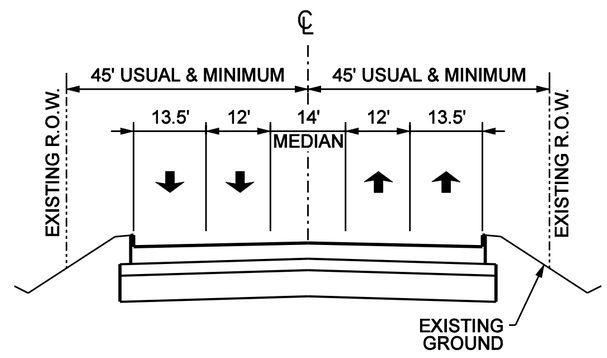

EXISTING F.M.423

4 LANE SECTION
FROM SOUTH OF STEWART CREEK BRIDGE TO CHOWNING CIRCLE

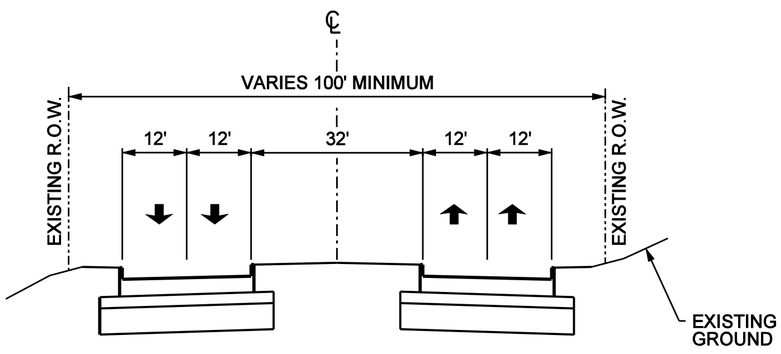

EXISTING F.M.423

6 LANE URBAN SECTION
FROM CHOWNING CIRCLE TO NASH DRIVE
AND
FROM NORTH OF SOUTH COLONY BLVD TO SH 121

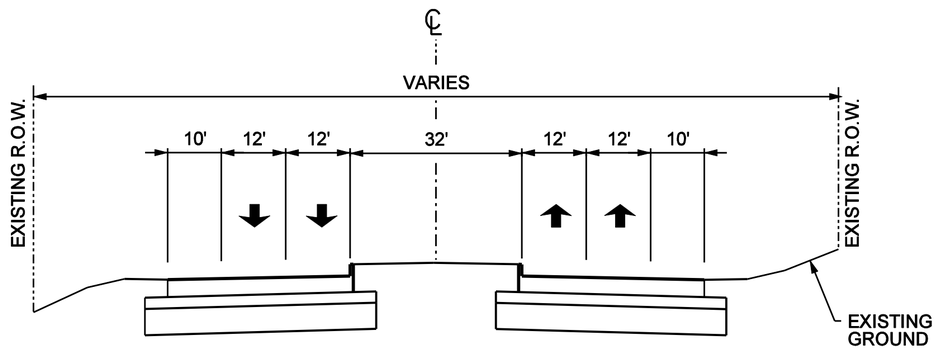

EXISTING F.M.423

6 LANE URBAN SECTION
FROM NASH DRIVE TO NORTH OF SOUTH COLONY BLVD

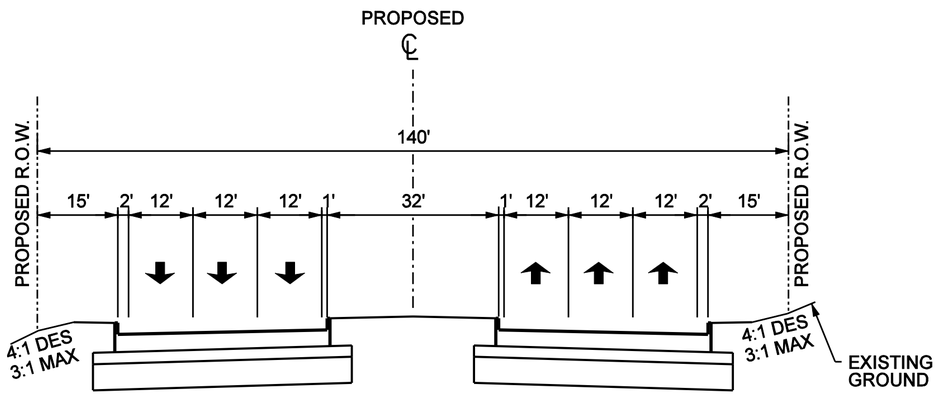

PROPOSED F.M.423

6 LANE URBAN ARTERIAL SECTION
FROM STEWARTS CREEK RD TO COUGAR ALLEY

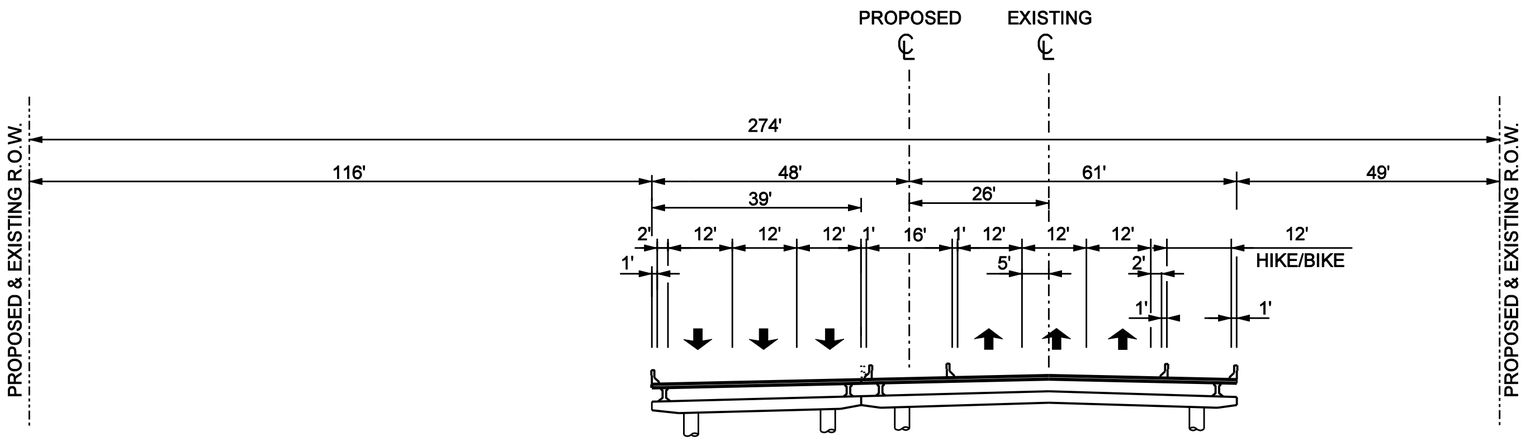

PROPOSED F.M.423

6 LANE URBAN ARTERIAL SECTION
AT STEWART CREEK BRIDGE

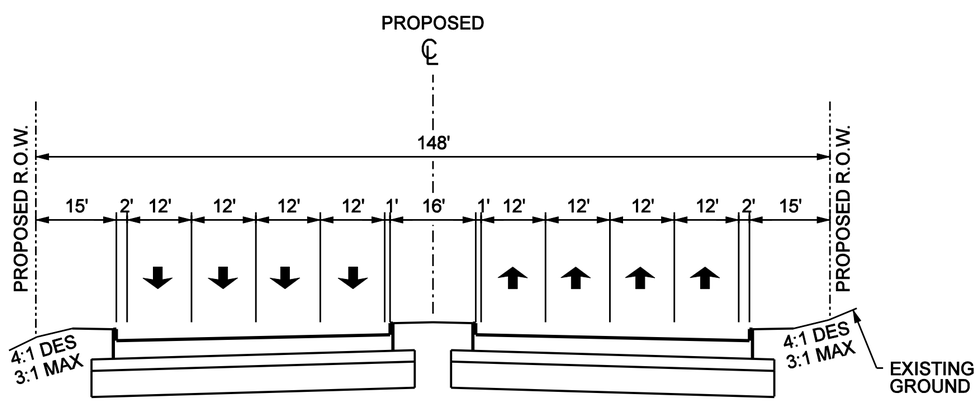

PROPOSED F.M.423

8 LANE URBAN ARTERIAL SECTION
FROM COUGAR ALLEY TO SH 121

TYPICAL SECTIONS F.M. 423

Carter Burgess

THE COLONY TEXAS
CITY BY THE LAKE

Texas Department of Transportation

...\Exhibits\PublicMtgtypscts.dgn 11/17/2005 11:15:03 AM